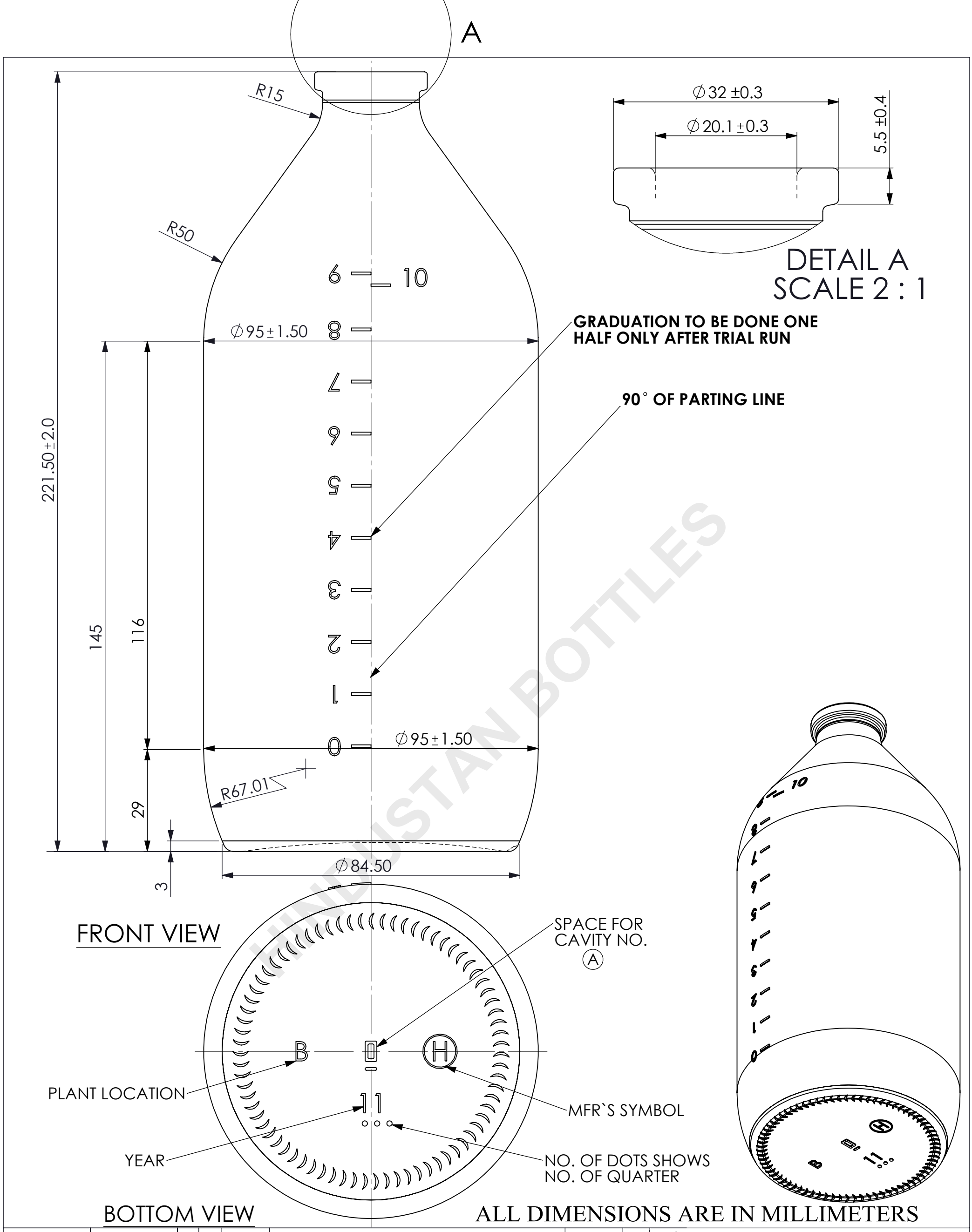

HINDUSTAN BOTTLES

PROCESS	**NNPB**								SPECIFICATION AGREEMENT ARE BASED ON TOLERANCED DIMENSIONS ONLY DO NOT SCALE DRAWING
MINIMUM THROUGH BORE	–								COPYRIGHT RESERVED. NOT TO BE COPIED IN WHOLE OR PART WITHOUT WRITTEN PERMISSION FROM H.N.G.& I. LTD.
FILL POINT VERIFIED				A	DIGITAL MOULD READER CAV. NO ADDED	15.09.11	KSB		HINDUSTHAN NATIONAL GLASS & IND. LTD.
TILT ANGLE	–		**No.**	**REV**	**REVISION**	**DATE**	**BY**	**CHK**	
MAXIMUM DEPTH OF STANDARD ENGRAVING	–	**FILL-POINT**			**1000 ML ± 15 ML. (UP TO MARK OF "10")**				TITLE 1000 ML INFUSION BOTTLE
MAX. GAS VOLUMES	–	**BRIMFUL CAP.**			**1120 ML ± 15 ML.**				**CUST** **Common Market Bottle**
REF DRG No :- W1-00137		**WEIGHT**			**370.0 ± 20 GMS.**				**DRN** Sandeep **DR. DT.** 09/08/2009
MOULD EQUIPMENT ORDERED BY		**FINISH**			**32 MM VIAL**	**COLOUR**	**FLINT**		**CHK.** R. S. GUPTA **CHK. DT.** 5/14/2010
PLANT	**B**	**SURFACE TREATMENT**			**NO**	**C.C. NO.**	**HNG-00053**		**APPD.** **APPD. DT.**
									DRAWING No. **HNG-00053** A4 REV. A